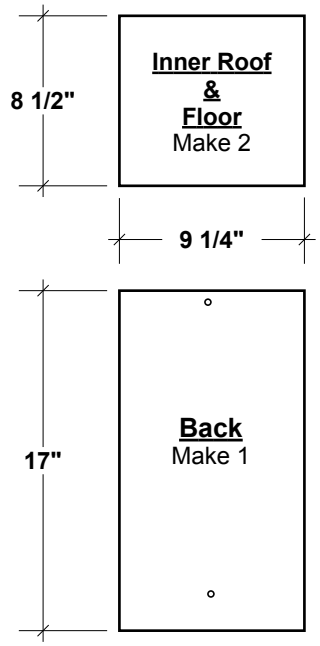

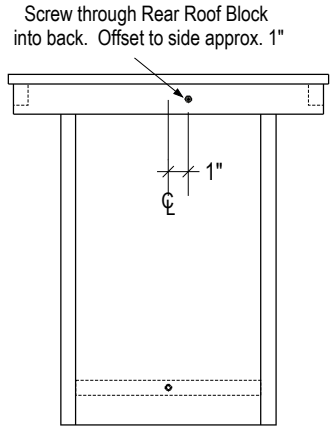

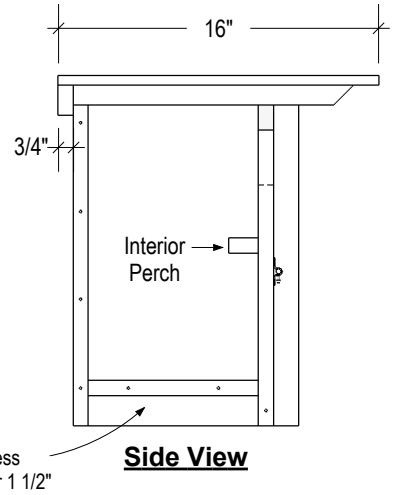

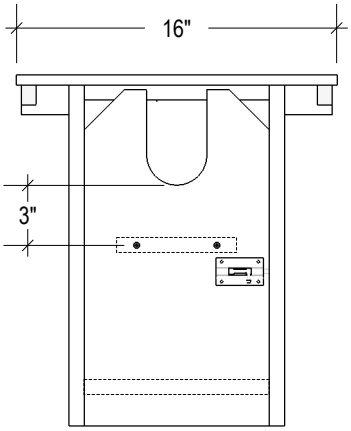

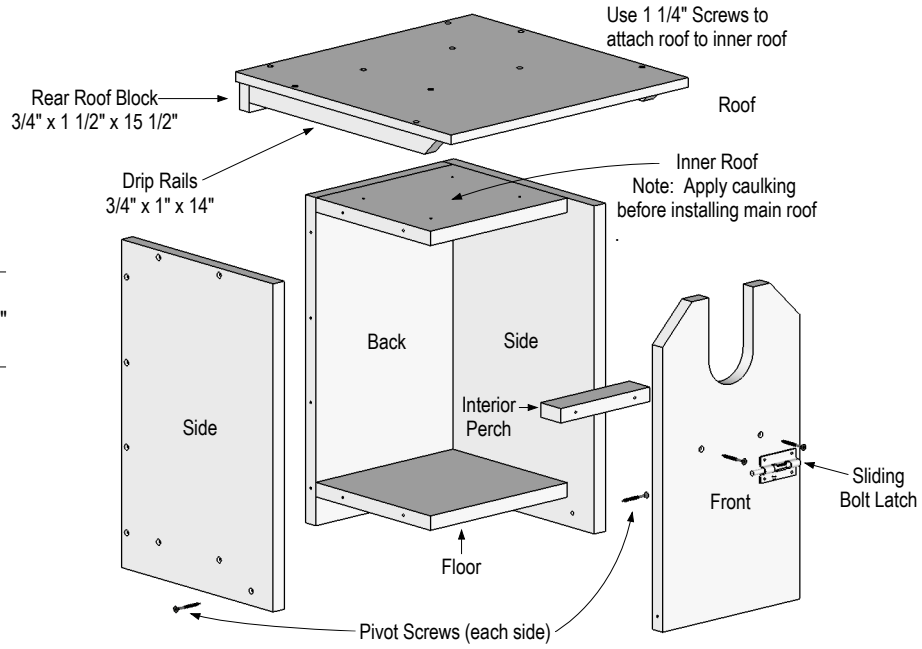

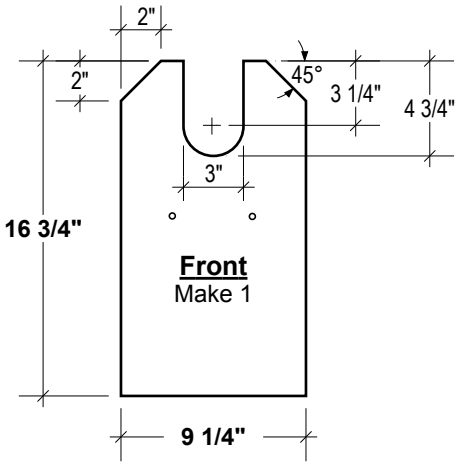

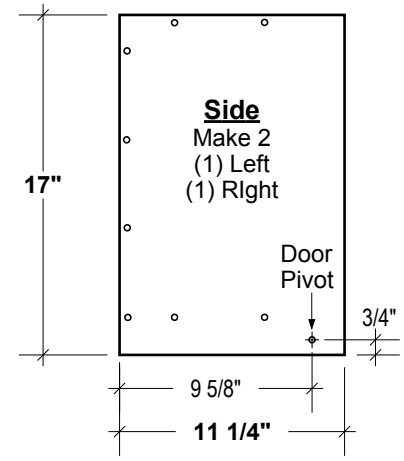

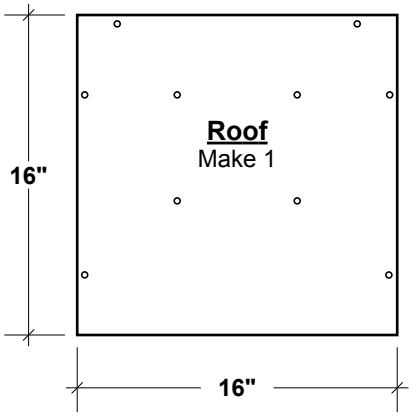

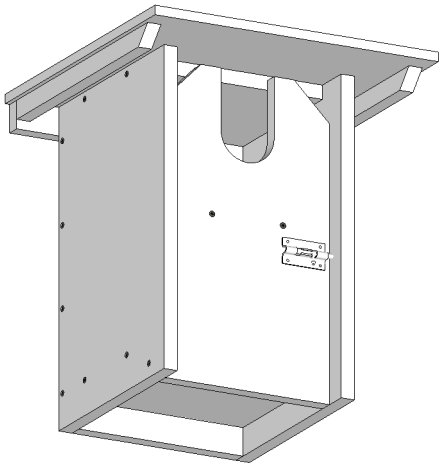

Quan	Material	Quan	Material
2	3/4" x 9 1/4 x 8 1/2" - Floor & Inner Roof	1	3/4" x 1 1/2" x 15 1/2" - Rear Roof Block
1	3/4" x 9 1/4 x 17" - Back	1	1/2" x 16" x 16" - Roof (1/2" Ext. Plywood)
1	3/4" x 9 1/4 x 16 3/4" - Front	4	#8 x 1 1/4" Exterior Wood Screws
2	3/4" x 11 1/4 x 17" - Sides	29	#8 x 1 5/8" Exterior Wood Screws
1	3/4" x 1" x 6" - Interior Perch	1	Sliding Bolt Latch
2	3/4" x 1" x 14" - Drip Rails		

Spartan

American Kestrel Nestbox

Designed by: Tom Comfort

Drawn by: Fred Stille, Sr. | Ver. 1.0, Dec 4, 2012 | Page 1 of 1

plan by NestBoxBuilder.com Copyright © 2013 All rights reserved